Wall-Mounted Basin Faucet

6703-S5-81CP

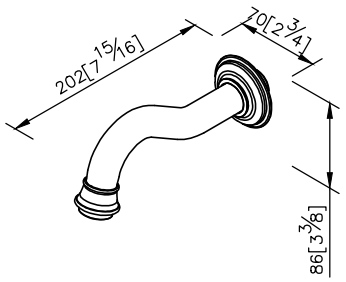

unit: mm[inch]
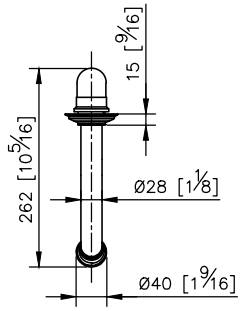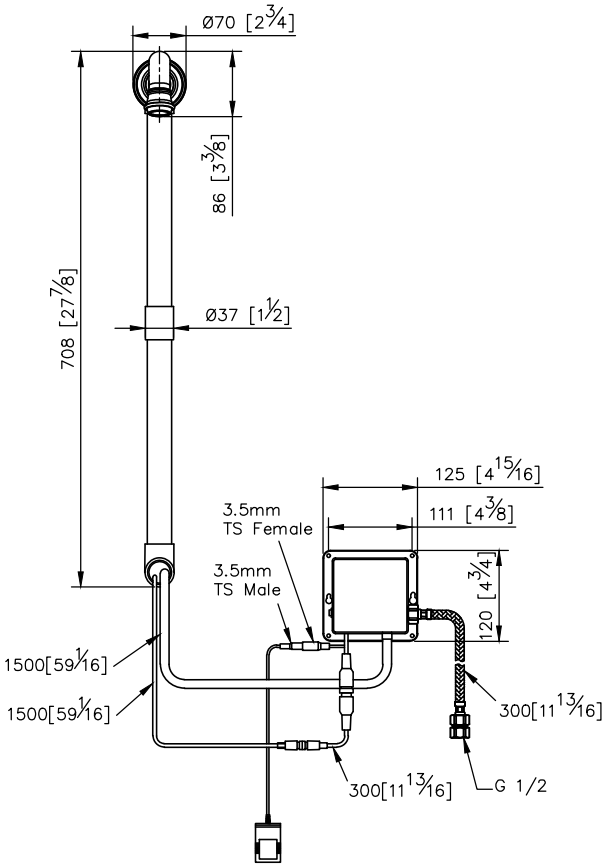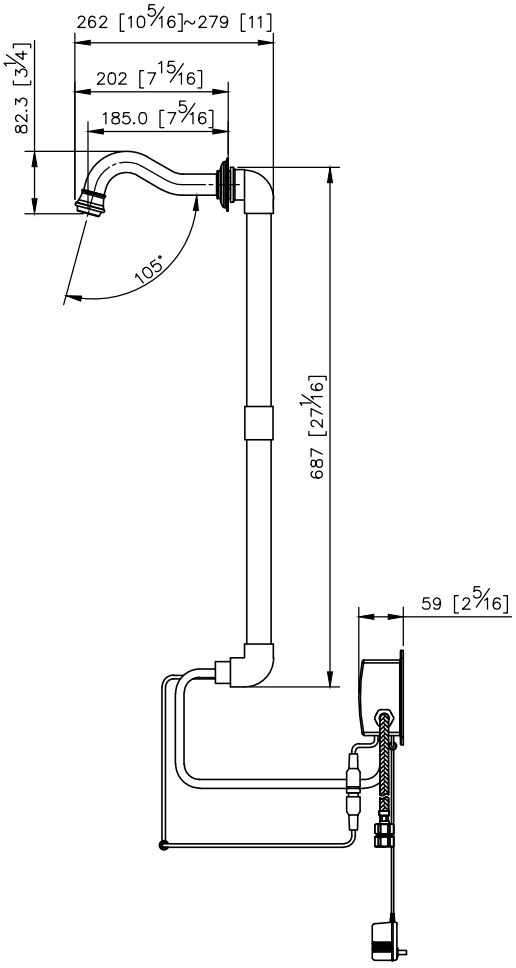
1.Brass of casting body meets ISO CuZn40Pb standard.
2.Premium metal construction for durability.
3.Justime finishes resist corrosion and tarnish.
4.Finish meets the standard of ASTM-SC2.
5.Aerator with removable flow restrictor (2.2 GPM max.), end-user can take off it for larger water flow if necessary.
6.Coordinates with other products in Classik collection.