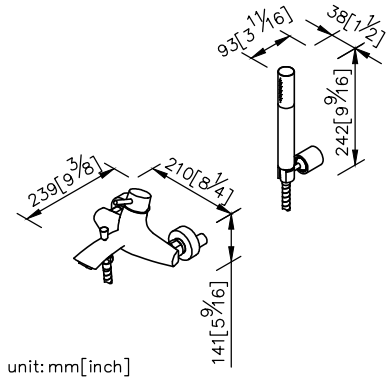
93[3 1/16]
38[1 1/2]
242[9 9/16]
239[9 3/8]
210[8 1/4]
141[5 9/16]
unit: mm[inch]

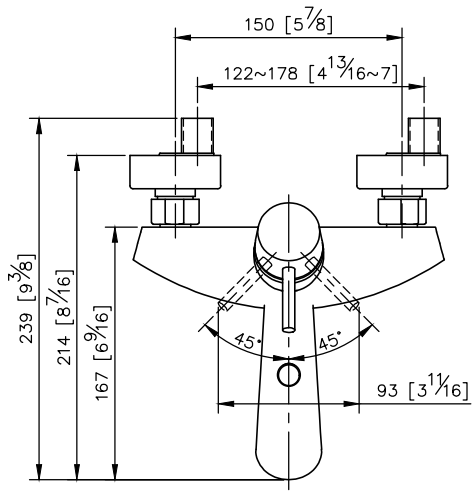
150 [5 7/8]
122~178 [4 13/16~7]
239 [9 3/8]
214 [8 7/16]
167 [6 9/16]
45°
45°
93 [3 11/16]

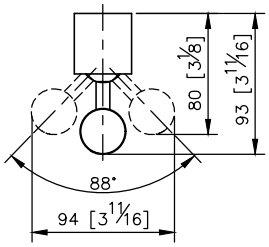
80 [3 1/8]
93 [3 11/16]
88°
94 [3 11/16]

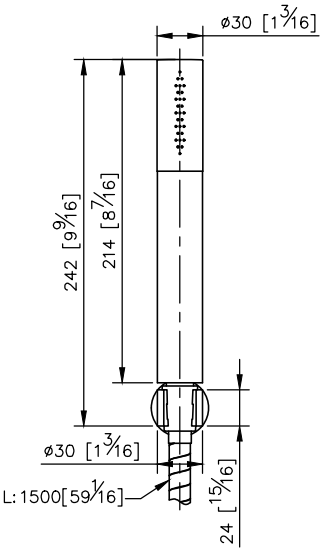
ø30 [1 3/16]
242 [9 9/16]
214 [8 7/16]
ø30 [1 3/16]
L: 1500[59 1/16]
24 [15/16]

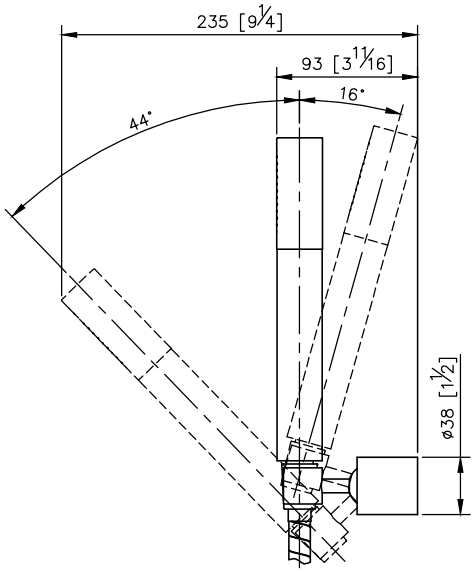
235 [9 1/4]
93 [3 11/16]
16°
44°
ø38 [1 1/2]

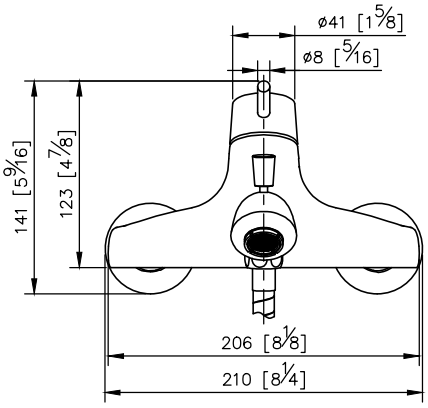
ø41 [1 5/8]
ø8 [5/16]
141 [5 9/16]
123 [4 7/8]
206 [8 1/8]
210 [8 1/4]

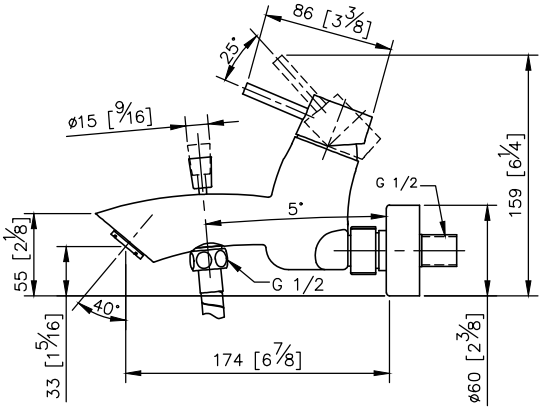
86 [3 3/8]
25°
ø15 [9/16]
G 1/2
5°
159 [6 1/4]
55 [2 1/8]
G 1/2
40°
33 [1 5/16]
174 [6 7/8]
ø60 [2 3/8]