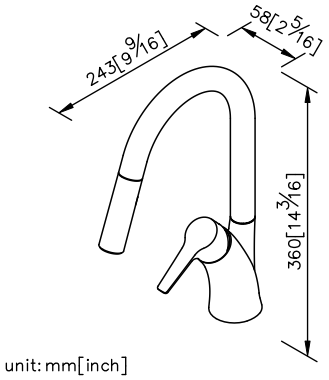
243[9 9/16]
58[2 5/16]
360[14 3/16]
unit: mm[inch]

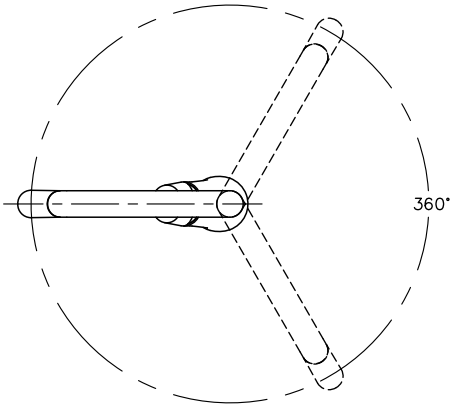
360°

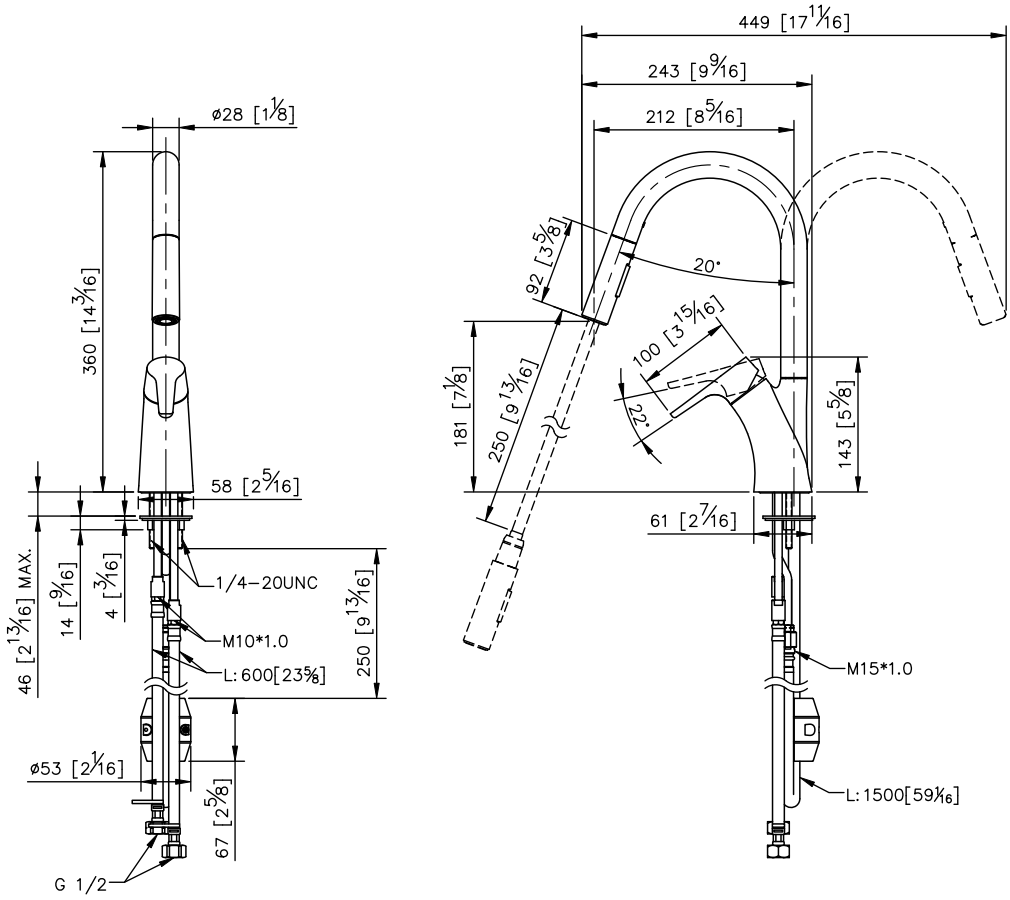
449 [17 11/16]
243 [9 9/16]
212 [8 5/16]
ø28 [1 1/8]
360 [14 3/16]
92 [3 5/8]
20°
100 [3 15/16]
22°
181 [7 1/8]
250 [9 13/16]
143 [5 5/8]
58 [2 5/16]
61 [2 7/16]
46 [2 13/16] MAX.
14 [9/16]
4 [3/16]
1/4–20UNC
M10*1.0
L: 600[23 5/8]
250 [9 13/16]
M15*1.0
ø53 [2 1/16]
67 [2 5/8]
L: 1500[59 1/16]
G 1/2