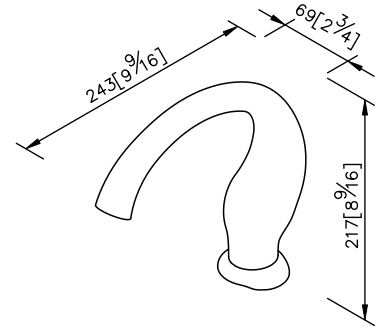
243[9 9/16]
69[2 3/4]
217[8 9/16]

unit: mm[inch]

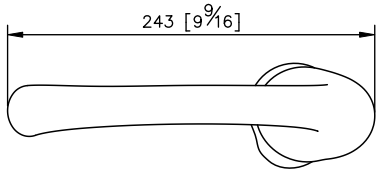
243 [9 9/16]

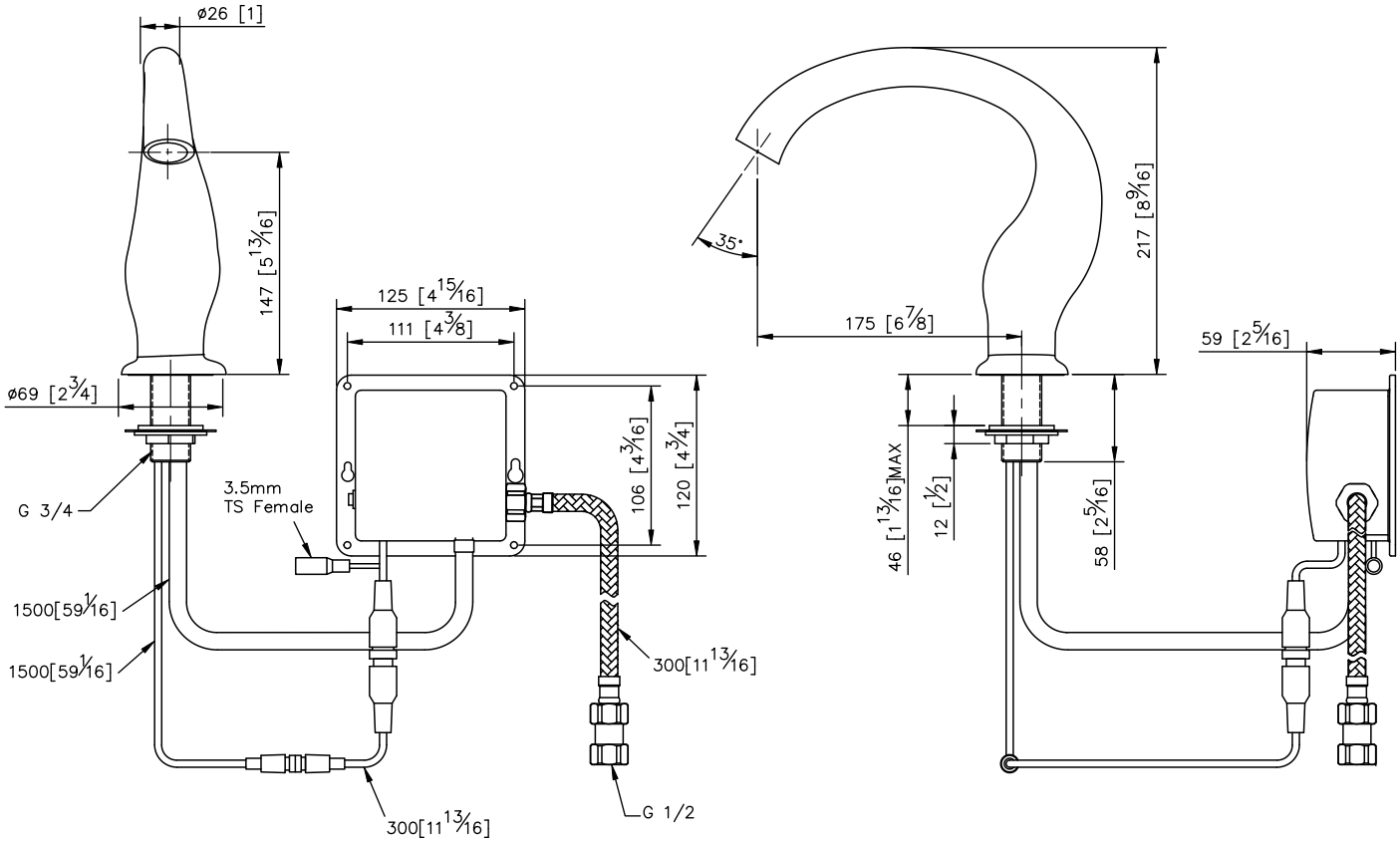
ø26 [1]
147 [5 13/16]
ø69 [2 3/4]
G 3/4
1500[59 1/16]
1500[59 1/16]
125 [4 15/16]
111 [4 3/8]
3.5mm
TS Female
106 [4 3/16]
120 [4 3/4]
300[11 13/16]
300[11 13/16]
G 1/2
35°
217 [8 9/16]
175 [6 7/8]
59 [2 5/16]
46 [1 13/16]MAX
12 [1/2]
58 [2 5/16]