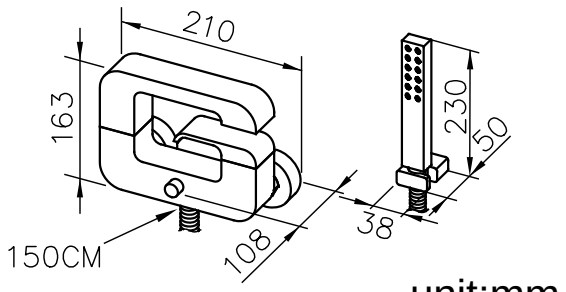
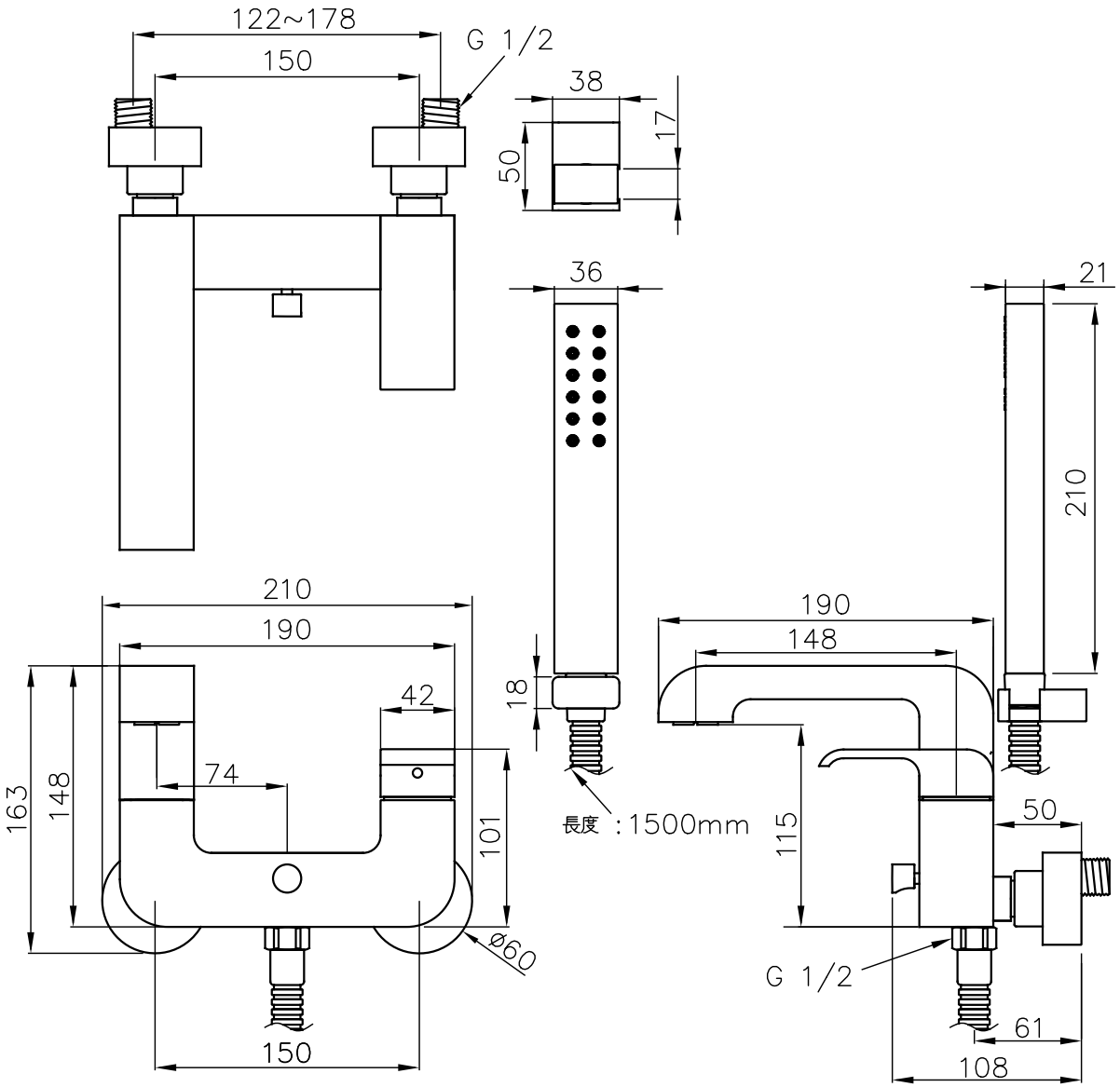
Bath/Shower Mixer W/Hand Shower & 150cm Hose & Bracket