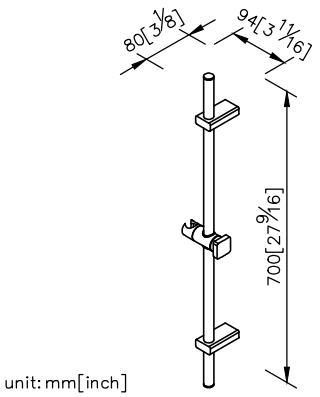

Slide Bar Set

6909-9T-80CP
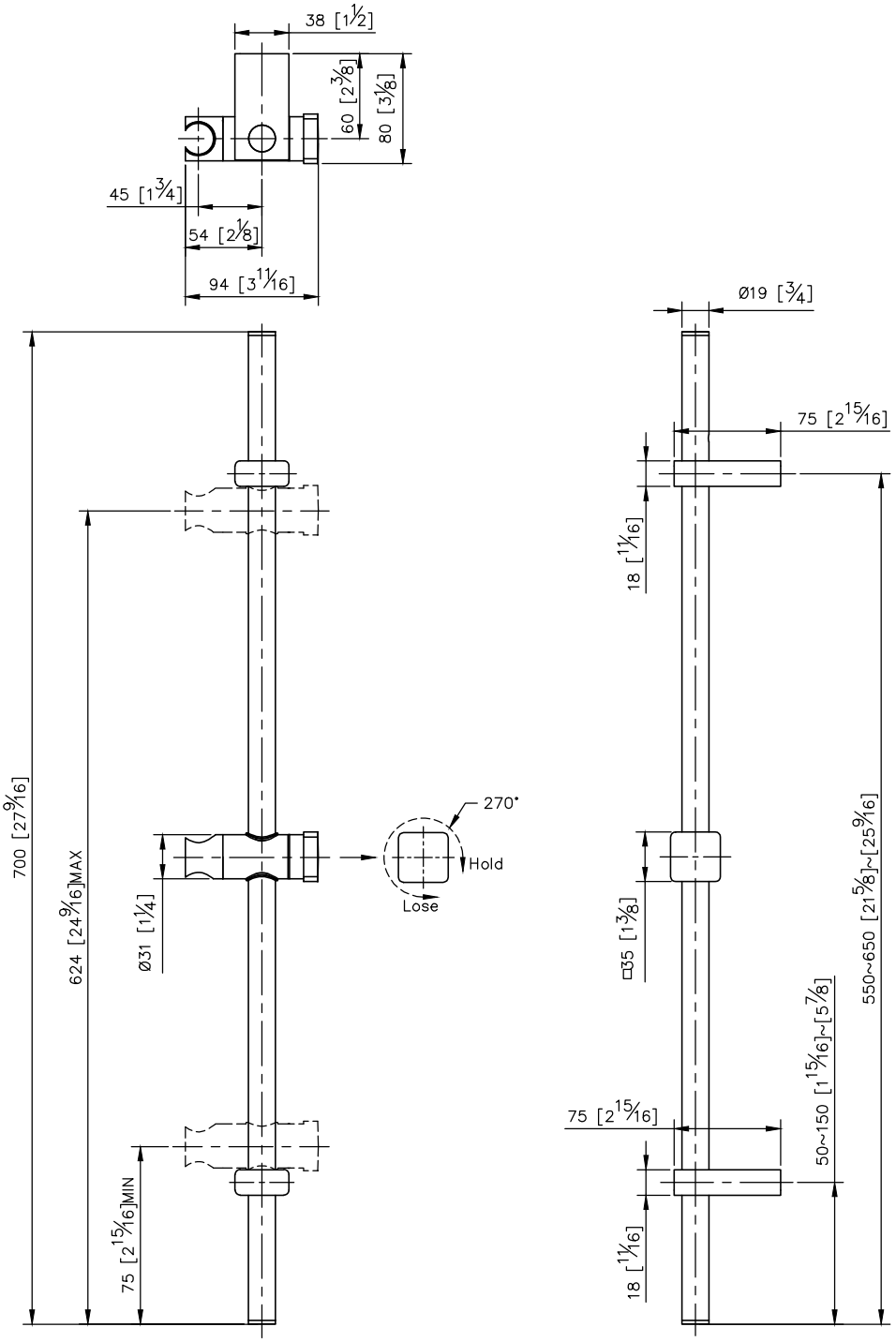
1.Horizontal swiveling and vertical moving holder of hand shower helps the adjustment of the position.
2.Brass with Chrome plated finish meets ASTM-SC2 standard.