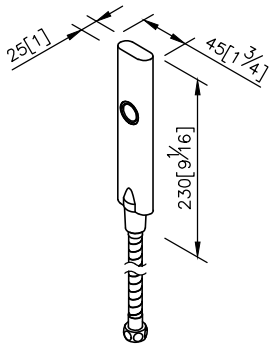
25[1]
45[1 3/4]
230[9 1/16]

unit: mm[inch]

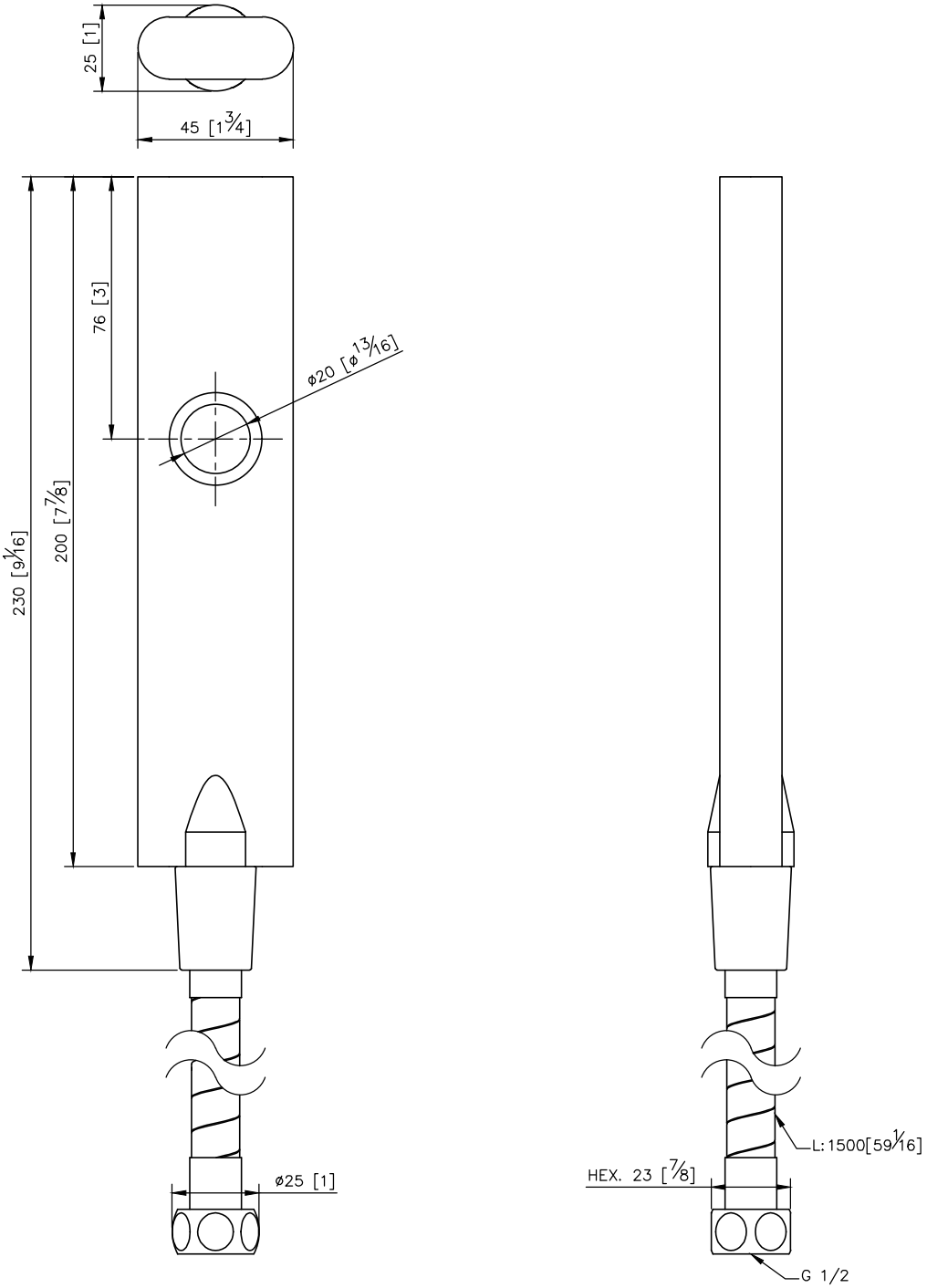
25 [1]
45 [1 3/4]
76 [3]
ø20 [ø 13/16]
230 [9 1/16]
200 [7 7/8]
ø25 [1]
L: 1500[59 1/16]
HEX. 23 [7/8]
G 1/2