INSTALLATION INSTRUCTIONS

WATER DRINKING FAUCET
飲水機龍頭安裝說明

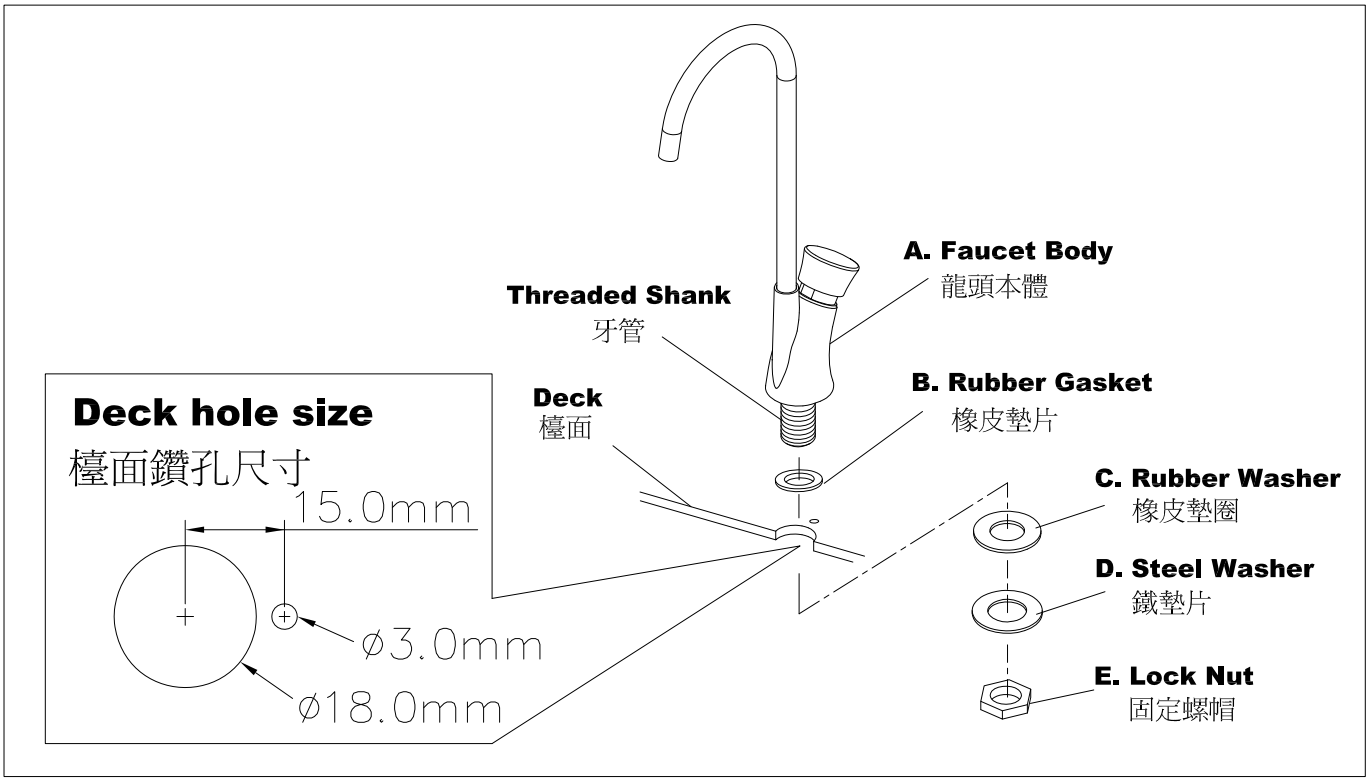

CAUTION : Risk Of Stainless Steel Damage.
注意：避免損壞不銹鋼產品

1. Use only mild detergent or cleaner for cleaning.
   清潔產品，務必選用中性清潔劑。
2. Cleaners containing chloride (ex. hydrochloric acid) are not recommended. If used, please rinse the surface immediately and exactly to prevent corrosion.
   請勿使用含氯化物的清潔劑（如：鹽酸）。如已誤用，請立即使用清水確實洗淨，以避免產品銹蝕。

Drill ϕ18.0mm (0.7") & ϕ3.0mm (0.12") holes between 15.0mm(0.6") in proper position on the deck, then install the **Washers** & **Lock Nut** onto the **Faucet Body** as fig shown.

在檯面適當的位置，鑽上φ18.0mm(0.70") 和φ3.0mm(0.12")的洞，注意中心位置爲15.0mm，依圖示順序安裝飲水機龍頭。
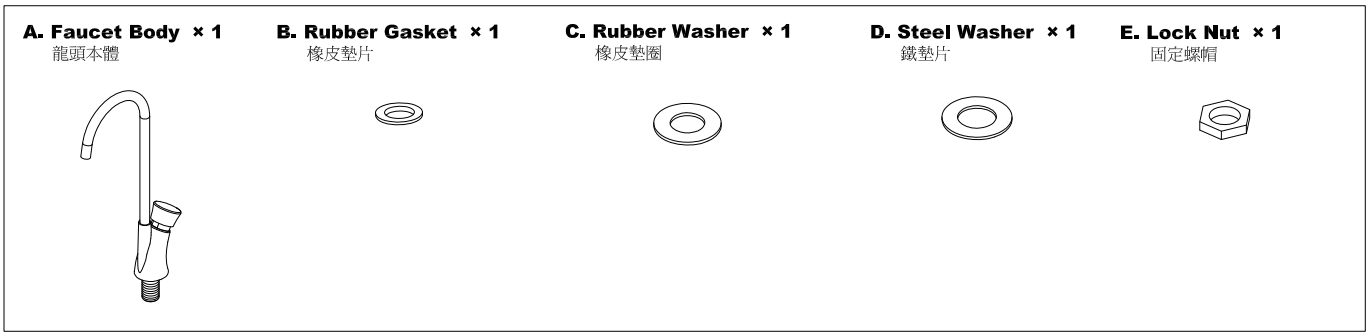
FIXING CONTENTS
組配件內容